VX-ST Submersible electric pumps

Sewage waters
Domestic use
Civic use
Industrial use

VORTEX

- Efficiency and quality have always been the Pedrollo's primary objectives. With this spirit, this powerful and robust range of submersible electric pumps VX-ST has been designed, with full stamped stainless steel construction and characterised by a particular resistance to corrosion and abrasion.
- The hydraulic geometry of the volute and of the impeller are the result of a refined fluid-dynamic calculation which has allowed achieving excellent performance and high efficiency that turn into remarkable energy savings.
- The careful choice of components, strict quality control and advanced manufacturing techniques grant fully reliable and safe operation of these electric pumps for every user, with a long service life even in the harshest applications.

VX-MF (VORTEX) version with pump body and impeller made of precision cast steel available on request.

PERFORMANCE RANGE
- Flow rate up to **700 l/min** (42 m^3/h)
- Head up to **17 m**

APPLICATION LIMITS
- Depth of use below the water level down to **5 m**
- Maximum liquid temperature **+40°C**
- Passage of suspended solids:
  – up to **Ø 40 mm** for VX /35-ST
  – up to **Ø 50 mm** for VX /50-ST
- Minimum immersion depth for continuous service:
  – **290 mm** for VX 8-ST and VX 10-ST
  – **330 mm** for VX 15-ST
  – **360 mm** for VX 20-ST

CONSTRUCTION AND SAFETY STANDARDS
- Power cable of length **10 m**
- External float switch for single-phase versions

INSTALLATION AND USE
VX-ST stainless steel electric pumps are recommended for draining **sewage water** in domestic, civic and industrial sectors, in all cases where the water contains suspended solids, for example water mixed with mud, groundwater, and surface water. They are recommended for draining flooded areas such as cellars, underground car parks, car washes, for emptying cesspools and for sewage disposal. These pumps stand out for their reliability, which can best be appreciated under automatic operating conditions in fixed installations.

PATENTS - TRADEMARKS - MODELS
- Patent No. EP2313658
- Patent No. IT0001428923

OPTIONS AVAILABLE ON REQUEST
- Single-phase electric pumps without a float switch
- AISI 316L stainless steel pump shaft
- Other voltages or 60 Hz frequency

WARRANTY
2 years as per our general terms and conditions of sale

VX-ST Submersible electric pumps

PEDROLLO the spring of life

PERFORMANCE DATA AND CURVES

50 Hz n= 2900 min^{-1}

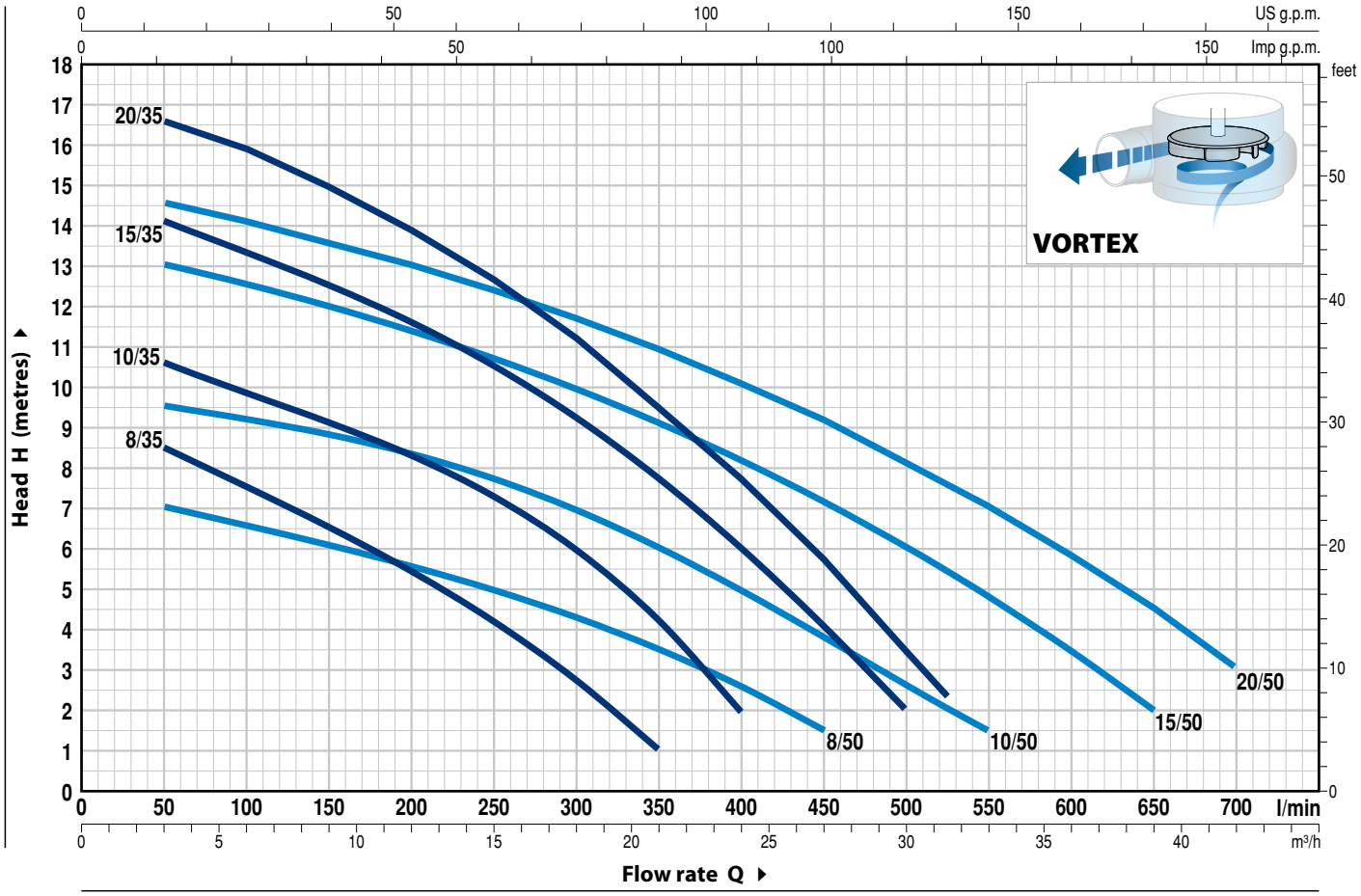

MODEL		POWER (P2)		Q m³/h	0	3	6	12	18	21	24	27	30	31.5	33	36	39	42
Single phase	**Three phase**	**kW**	**HP**	**Q l/min**	**0**	**50**	**100**	**200**	**300**	**350**	**400**	**450**	**500**	**525**	**550**	**600**	**650**	**700**
VXm 8/35 -ST	**VX 8/35 -ST**	0.55	0.75	H metres	9.5	8.5	7.5	5.4	2.7	1								
VXm 10/35 -ST	**VX 10/35 -ST**	0.75	1		11.5	10.5	10	8.3	6	4	2							
VXm 15/35 -ST	**VX 15/35 -ST**	1.1	1.5		15	14	13.5	11.7	9.2	7.7	6	4.1	2					
VXm 20/35 -ST	**VX 20/35 -ST**	1.5	2		17	16.5	15.9	14	11	9.5	7.7	5.7	3.5	2.5				
VXm 8/50 -ST	**VX 8/50 -ST**	0.55	0.75		7.5	7	6.6	5.7	4.2	3.5	2.5	1.5						
VXm 10/50 -ST	**VX 10/50 -ST**	0.75	1		10	9.5	9.2	8.5	7	6	5	3.8	2.7	2	1.5			
VXm 15/50 -ST	**VX 15/50 -ST**	1.1	1.5		13.5	13	12.5	11.5	10	9	8	7	6	5.4	4.7	3.3	2	
VXm 20/50 -ST	**VX 20/50 -ST**	1.5	2		15	14.5	14	13	11.7	11	10	9	8.2	7.6	7	5.8	4.5	3

Q = Flow rate **H** = Total manometric head

Performance tolerance as per EN ISO 9906 Grade 3B.

COMPANY WITH QUALITY SYSTEM CERTIFIED BY DNV GL = ISO 9001 =

VX-ST Submersible electric pumps

VORTEX

POS.	COMPONENT	CONSTRUCTION CHARACTERISTICS
1	**PUMP BODY**	AISI 304 stainless steel with threaded port in compliance with ISO 228/1
2	**BASE**	AISI 304 stainless steel
3	**IMPELLER**	AISI 304 stainless steel VORTEX type. The VORTEX impeller allows pumping solids with a diameter of up to 50 mm and thanks to its special geometry it ensures safe operation against clogging.
4	**MOTOR CASING**	AISI 304 stainless steel
5	**MOTOR CASING PLATE**	AISI 304 stainless steel for **VX 8-10 ST** Cast iron with cataphoresis treatment for **VX 15-20 ST**
6	**MOTOR SHAFT**	AISI 431 stainless steel

7 SHAFT WITH DOUBLE MECHANICAL SEAL SEPARATED BY AN OIL CHAMBER

Seal	***Shaft***	*position*	*Materials*		
Model	***Diameter***		*Stationary ring*	*Rotational ring*	*Elastomer*
MG1-14D SIC	**Ø 14** mm	Motor side	Silicon carbide	Graphite	NBR
		Pump side	Silicon carbide	Silicon carbide	NBR

Double mechanical seal with interposed oil chamber, with sliding faces made of silicon carbide for greater resistance to abrasion and wear, and for a longer life of the electric pump.

8 BEARINGS

Electric pump	***Model***
VX 8-10 ST	**6203 ZZ / 6203 ZZ**
VX 15-20 ST	**6303 2RS - C3 / 6203 ZZ**

9 CAPACITOR **EN 60252-1/A1**
(for single-phase versions only)

10 ELECTRIC MOTOR

Electric motors manufactured to high quality standards, subjected to the most stringent controls to ensure excellent insulation. The winding, impregnated with high quality resin and oven-treated up to eight hours, ensures to the motor a long working life.

VXm-ST: single-phase 230 V - 50 Hz
with thermal overload protector incorporated into the winding
VX-ST: three-phase 400 V - 50 Hz

– Insulation: class F
– Protection: IP X8

11 POWER CABLE

Epoxy-resin encapsulated power cable, both between grommet and cable jacket and between wire insulations and conductors, to grant a complete insulation against moisture and water entering.

"H07 RN-F" type
(with Schuko plug for single-phase versions only)
Standard length 10 metres

12 EXTERNAL FLOAT SWITCH
(for single-phase versions only)

13 TILTING DEVICE FOR THE FLOAT CABLE
(for single-phase versions only)
Patent No. IT0001428923

14 TEAR-PROOF DEVICE FOR THE POWER CABLE
Patent No. EP2313658

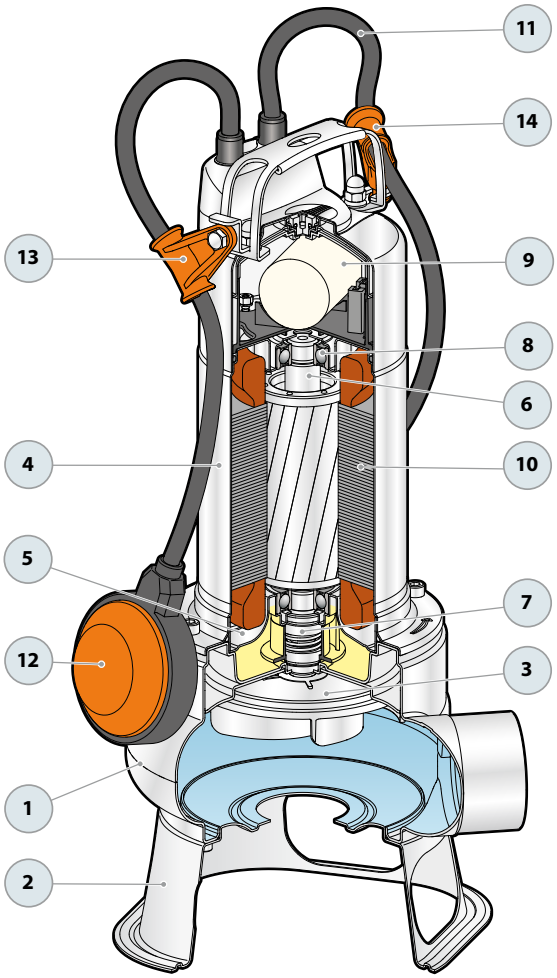

VX-ST Submersible electric pumps

PEDROLLO® the spring of life

DIMENSIONS AND WEIGHTS

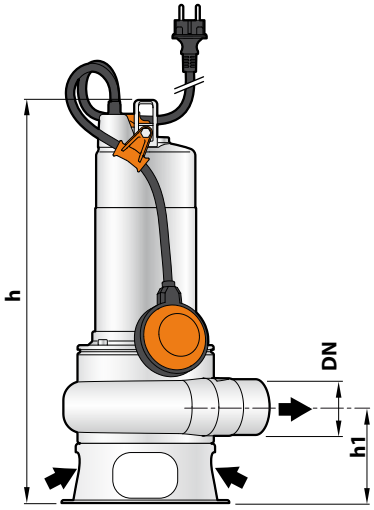

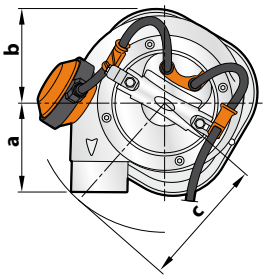

Typical installation

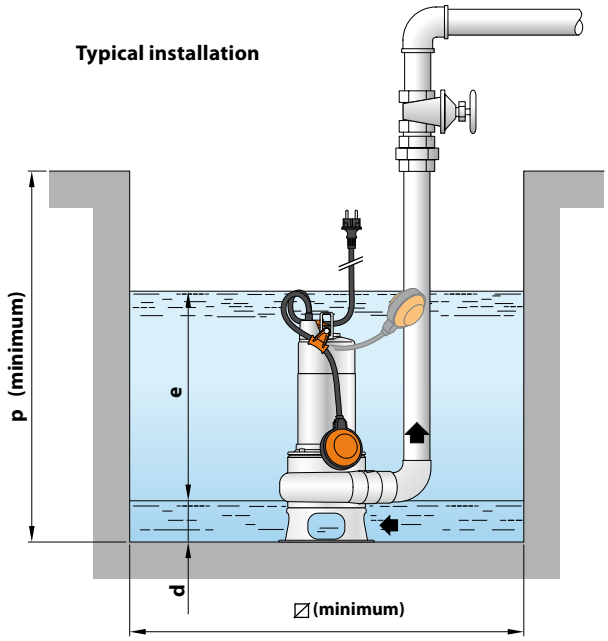

MODEL		PORT	Passage of solids up to	DIMENSIONS mm									kg	
Single phase	Three phase	DN		a	b	c	h	h1	d	e	p	⧄	1~	3~
VXm 8/35 -ST	VX 8/35 -ST	1½"	Ø 40 mm	95	96	140	424	106	55	adjustable	500	500	11.0	10.1
VXm 10/35-ST	VX 10/35-ST						439						12.7	11.5
VXm 15/35-ST	VX 15/35-ST						472						15.5	13.8
VXm 20/35-ST	VX 20/35-ST						502						17.7	15.6
VXm 8/50 -ST	VX 8/50 -ST	2"	Ø 50 mm	102	96	145	435	107	60				11.4	10.3
VXm 10/50-ST	VX 10/50-ST						450						12.9	11.7
VXm 15/50-ST	VX 15/50-ST						483						15.5	14.1
VXm 20/50-ST	VX 20/50-ST						513						17.8	15.6

ABSORPTIONS AND CAPACITORS

MODEL	VOLTAGE		CAPACITY
Single phase	230 V	240 V	(230 V or 240 V)
VXm 8/35 -ST	4.3 A	4.2 A	20 µF 450 VL
VXm 10/35-ST	5.5 A	5.4 A	25 µF 450 VL
VXm 15/35-ST	7.0 A	6.9 A	35 µF 450 VL
VXm 20/35-ST	9.6 A	9.4 A	35 µF 450 VL
VXm 8/50 -ST	4.3 A	4.2 A	20 µF 450 VL
VXm 10/50-ST	5.5 A	5.4 A	25 µF 450 VL
VXm 15/50-ST	7.0 A	6.9 A	35 µF 450 VL
VXm 20/50-ST	9.6 A	9.4 A	35 µF 450 VL

MODEL	VOLTAGE			
Three phase	230 V	240 V	400 V	415 V
VX 8/35 -ST	2.8 A	1.6 A	2.7 A	1.6 A
VX 10/35-ST	3.8 A	2.2 A	3.6 A	2.1 A
VX 15/35-ST	4.7 A	2.7 A	4.5 A	2.6 A
VX 20/35-ST	6.4 A	3.7 A	6.1 A	3.5 A
VX 8/50 -ST	2.8 A	1.6 A	2.7 A	1.6 A
VX 10/50-ST	3.8 A	2.2 A	3.6 A	2.1 A
VX 15/50-ST	4.7 A	2.7 A	4.5 A	2.6 A
VX 20/50-ST	6.4 A	3.7 A	6.1 A	3.5 A

VX-ST FOOTING CONNECTION KIT

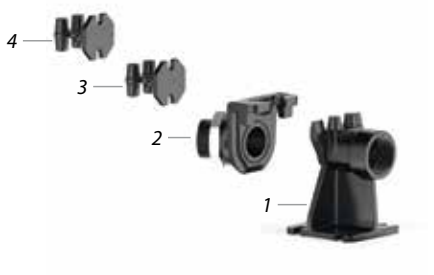

HORIZONTAL DELIVERY VERSION WITH ¾" GUIDE TUBES

For **VX /35-ST**	Code ASSPVX35ST	DN **2"**
For **VX /50-ST**	Code ASSPVX50ST	DN **2"**

Kit consisting of:
- footing connection
- slide guide with ring nut and seal
- support for the guide tubes

VERTICAL DELIVERY VERSION WITH ¾" GUIDE TUBES

For **VX /35-ST**	Code ASSPVX35STV	DN **2½"**
For **VX /50-ST**	Code ASSPVX50STV	DN **2½"**

Kit consisting of:
- footing connection complete with counterflange
- slide guide with ring nut and seal
- support for the guide tubes

1 - Footing connection

2 - Slide guide
(can also be ordered separately)

3 - Intermediate support
(on request)

4 - Guide tube support

SLIDE GUIDE (can also be ordered separately)

For **VX /35-ST**	Code ASSFL005
For **VX /50-ST**	Code ASSFL006

Complete with ring nut and seal

INTERMEDIATE SUPPORT (on request)

For guide tubes **Ø ¾"**	Code 859SV340INTFA

GUIDE TUBE (made of AISI 304 stainless steel)

Guide tube **Ø ¾"**	Code 54SARTG005

- **In order to ensure stability, insert the intermediate support every 2 metres of the guide tube**
- **Maximum tube length: 6 metres**

Horizontal delivery version

Vertical delivery version

VX-ST Submersible electric pumps

PEDROLLO the spring of life

DIMENSIONS (horizontal delivery version)

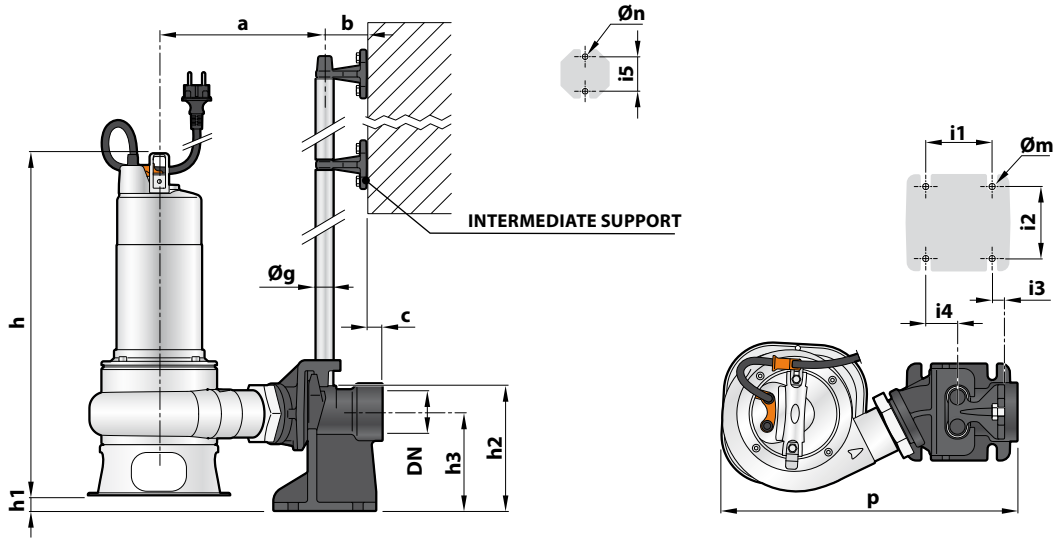

MODEL		Passage of solids	PORT	DIMENSIONS mm															
Single phase	Three phase	mm	DN	a	b	c	p	h	h1	h2	h3	i1	i2	i3	i4	i5	Øg	Øm	Øn
VXm 8/35 -ST	VX 8/35 -ST	40	2"	210	61	17	381	424	24	165	130	85	94	16	40	50	¾"	12	11
VXm 10/35-ST	VX 10/35-ST							439											
VXm 15/35-ST	VX 15/35-ST							472											
VXm 20/35-ST	VX 20/35-ST							502											
VXm 8/50 -ST	VX 8/50 -ST	50	2"	216			386	435	23										
VXm 10/50-ST	VX 10/50-ST							450											
VXm 15/50-ST	VX 15/50-ST							483											
VXm 20/50-ST	VX 20/50-ST							513											

DIMENSIONS (vertical delivery version)

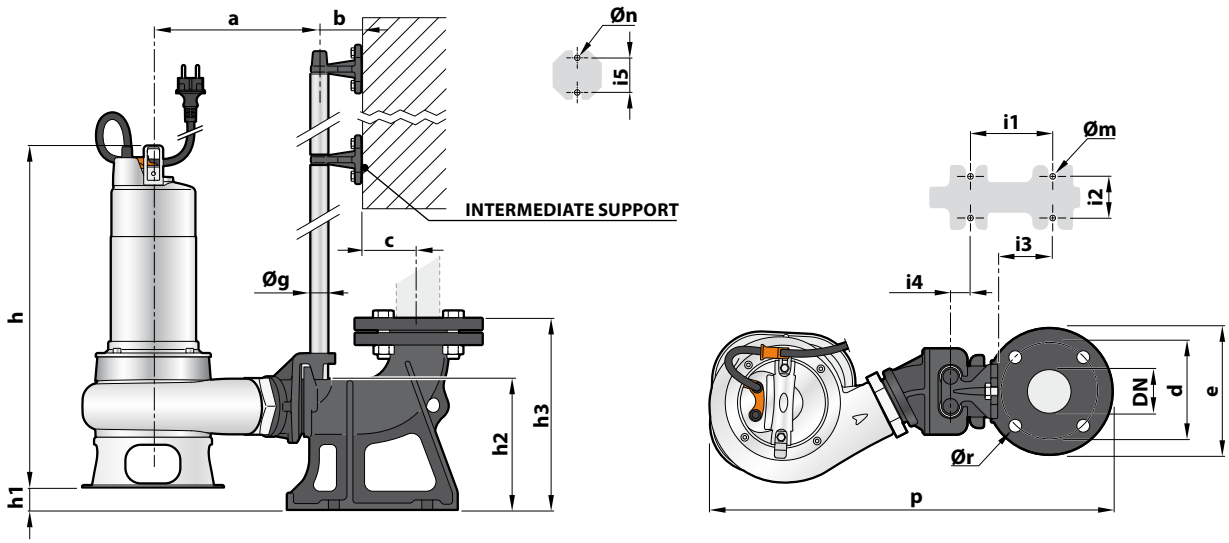

MODEL		Passage of solids	PORT	DIMENSIONS mm																		
Single phase	Three phase	mm	DN	a	b	c	d	e	p	h	h1	h2	h3	i1	i2	i3	i4	i5	Øg	Øm	Øn	Ør
VXm 8/35 -ST	VX 8/35 -ST	40	2½"	207	61	52	125	165	495	424	22	164	215	120	72	62	3	50	¾"	14	11	18
VXm 10/35-ST	VX 10/35-ST									439												
VXm 15/35-ST	VX 15/35-ST									472												
VXm 20/35-ST	VX 20/35-ST									502												
VXm 8/50 -ST	VX 8/50 -ST	50	2½"	212					501	435	26											
VXm 10/50-ST	VX 10/50-ST									450												
VXm 15/50-ST	VX 15/50-ST									483												
VXm 20/50-ST	VX 20/50-ST									513												